EndExam

QUESTION & ANSWER

Accurate study guides, High passing rate!

We offer free update service for one year!

http://www.endexam.com

Exam : JN0-681

Title : Data Center, Professional (JNCIP-DC)

Version : DEMO

1.Referring to the exhibit, not all routes are being exchanged by EBGP peers.

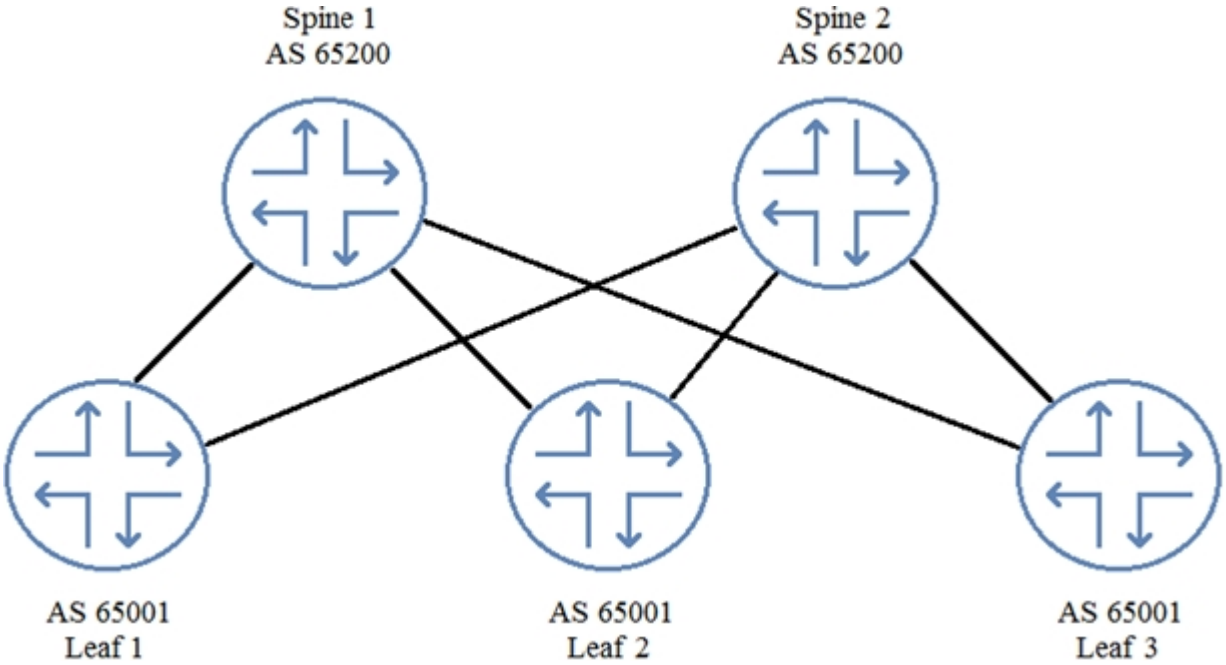

In this scenario, which BGP parameter would solve this problem?

A. multihop

B. multipath

C. multipath multiple-as

D. as-override

Answer: D

2.You need to add perimeter security to the network shown in the exhibit. All traffic must be inspected for attacks. The edge routers are using all available ports. Your solution must maintain both port and device resiliency.

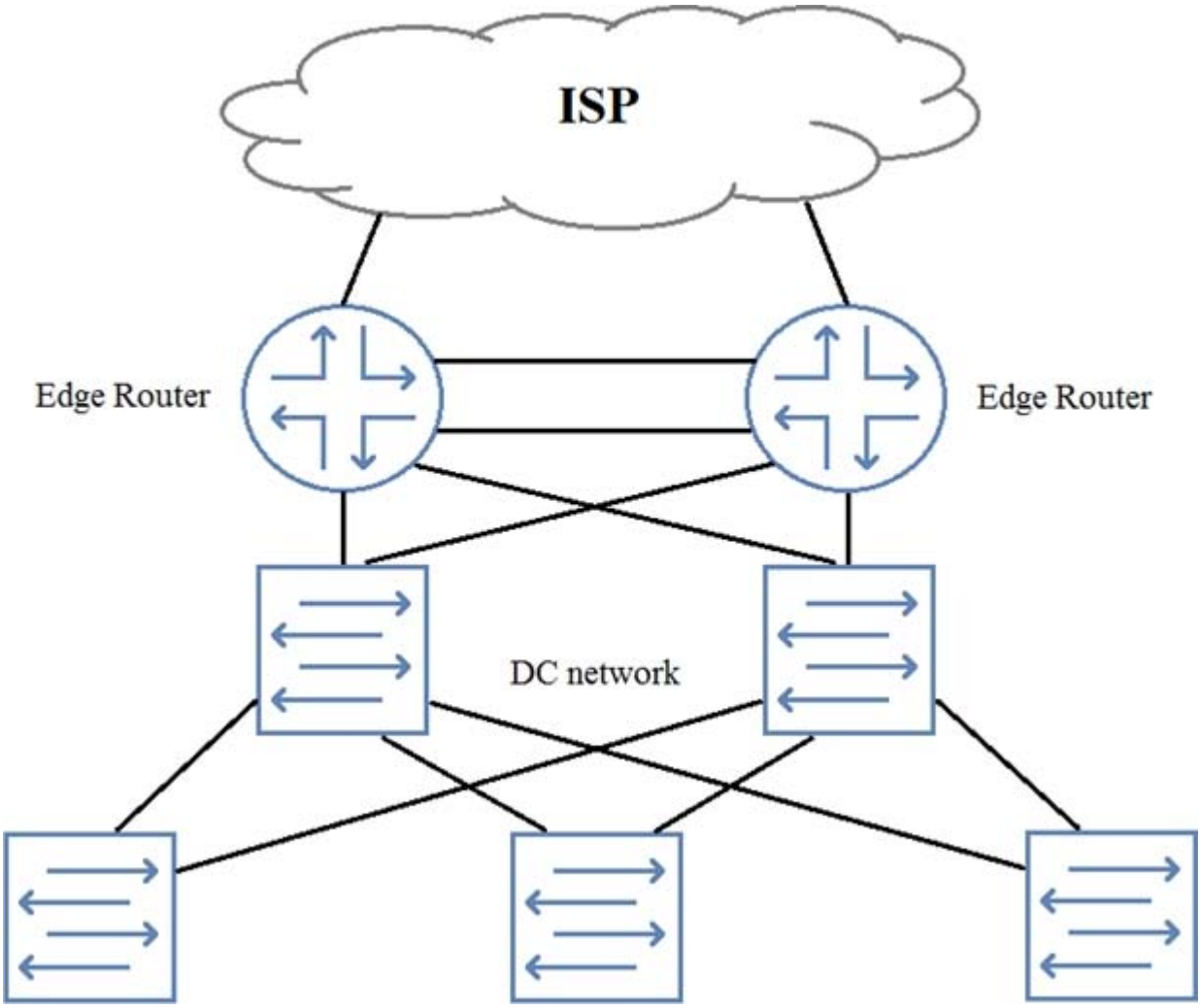

In this scenario, which design would satisfy these requirements?
A. one-arm SRX Series device using LAG
B. one-arm SRX Series chassis cluster
C. inline SRX Series chassis cluster
D. inline SPX Series device using LAG
Answer: B

3.You are designing a network for a small data center. In this scenario, which underlay protocol allows for the simplest implementation?
A. OSPF
B. IBGP
C. EBGP
D. MPLS
Answer: A

4.You are asked to manage the oversubscription ratio of your spine and leaf IP fabric. You determine that you are at a 3:1 ratio of downstream to upstream traffic and must achieve a 1:1 ratio.
In this scenario, which two actions would you take to achieve this goal? (Choose two.)
A. Increase the number of server-facing ports that each leaf node uses to carry traffic.

B. Reduce the number of server-facing ports that each leaf node uses to carry traffic.
C. Increase the number of spine nodes in your design.
D. Reduce the number of leaf nodes in your design.
Answer: BC

5.You are logged in to Leaf 1.

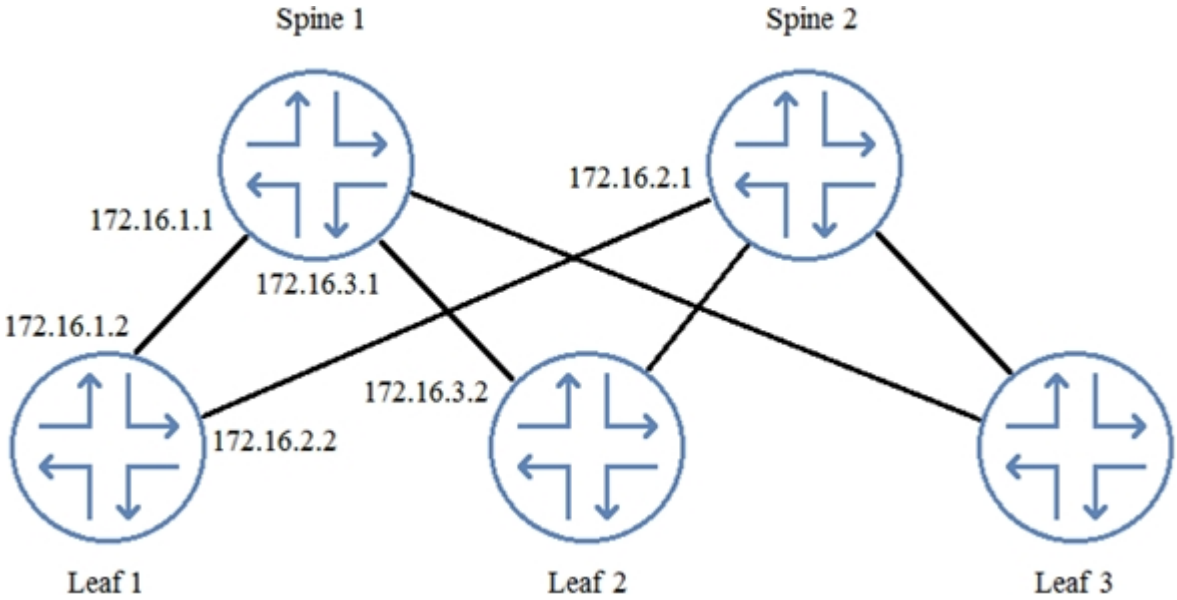

When examining the routing table, you notice that you have no routes from Leaf 2.
Referring to the exhibit, which two commands would you use to troubleshoot the problem? (Choose two.)
A. From Leaf 2, issue the show route advertising-protocol bgp 172.16.1.2command.
B. From Spine 1, issue the show route advertising-protocol bgp 172.16.1.1command.
C. From Spine 1, issue the show route advertising-protocol bgp 172.16.1.2command.
D. From Leaf 1, issue the show route receive-protocol bgp 172.16.1.1command.
Answer: CD